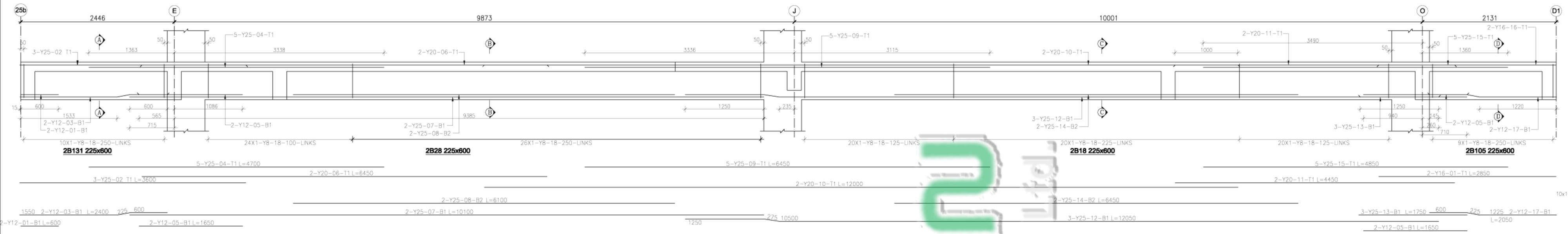

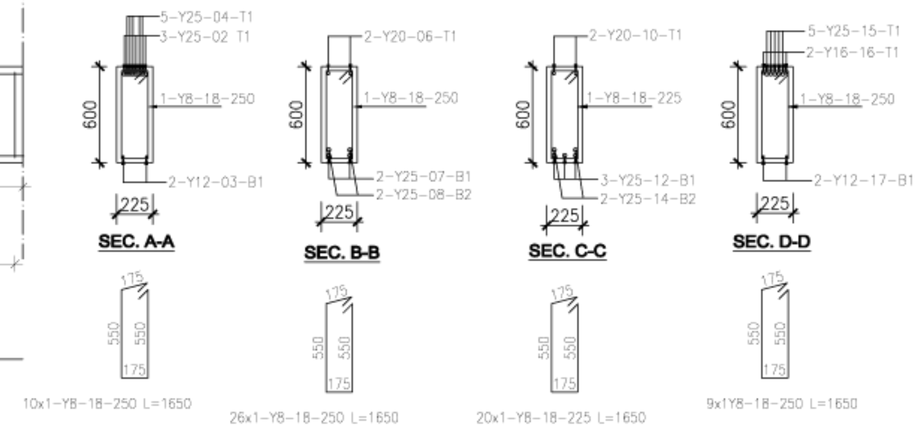

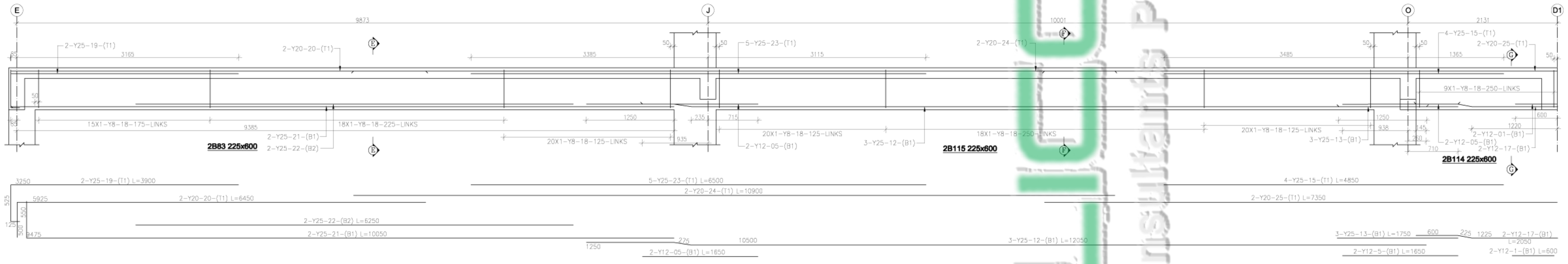

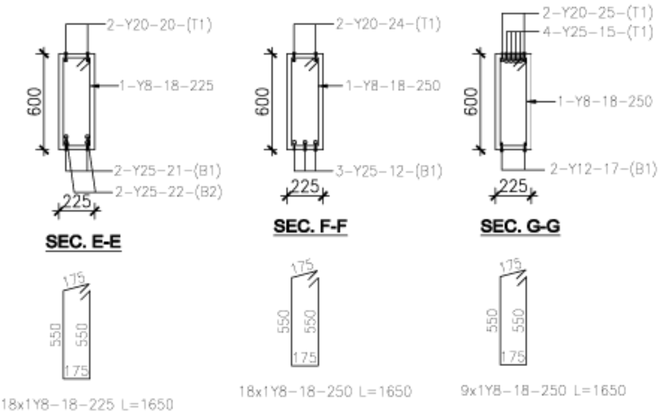

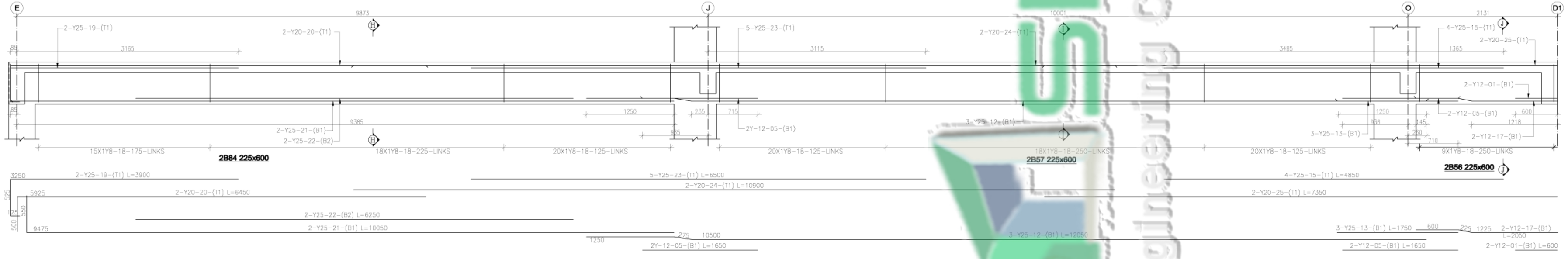

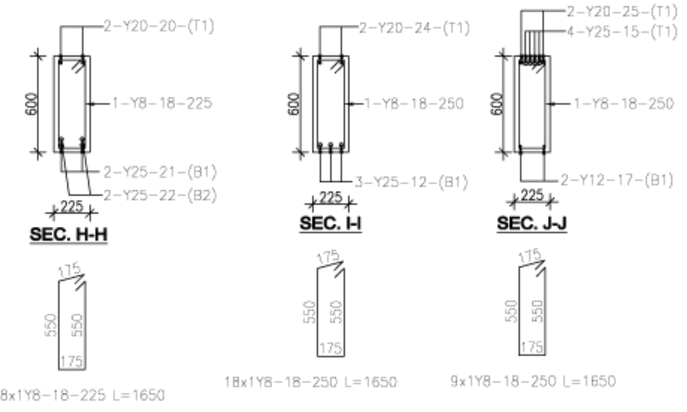

Silicon Engineering Consultants Pvt Ltd.

SILICON
ENGINEERING CONSULTANTS PVT LTD.
315 - Patel Avenue, Opp. Grand Bhagvati,
S.G. Highway, Ahmedabad-380059, Gujarat, INDIA
e-mail: info@siliconec.com
PH : +91-7940031887
www.siliconec.com